CTE

New range overview

COILS & COOLERS

LUVATA

Partnerships beyond metals

CTE

DRAFT

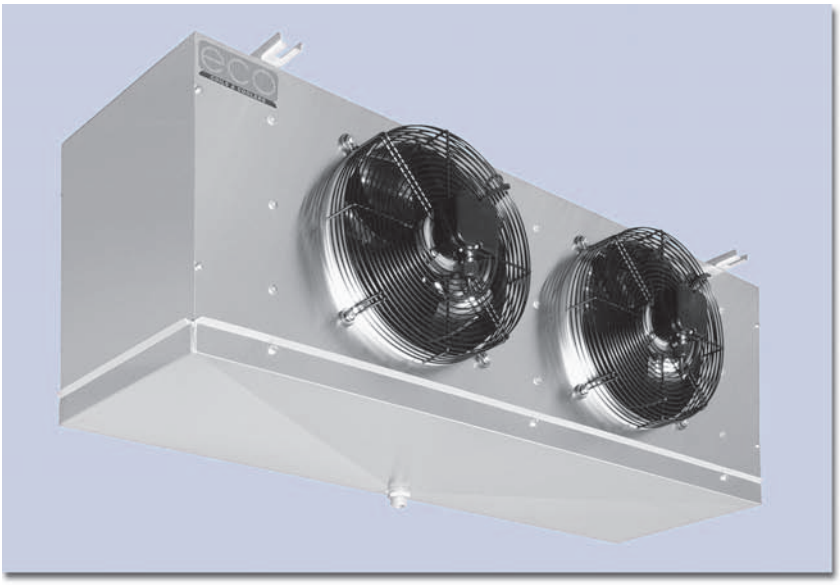

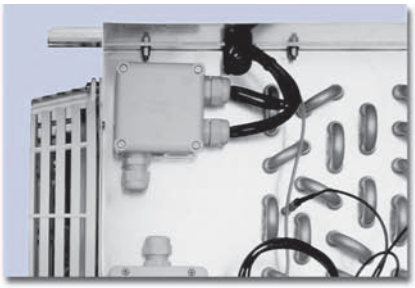

The **CTE** range of unit coolers is suitable for installation in cold rooms for the preservation of fresh or frozen products. The compact size of the unit allows to make maximum use of the storage space of the cold room in which it is installed.

The entire range is equipped with high efficiency coils made from special profile aluminium fins and inner grooved copper tube, suitable for the new generation refrigerants.

According to the room temperature the range is divided as follows:

- **CTE H3** for high temperatures (≥ +2 °C) with 3,5 mm fin spacing;
- **CTE H4** for high temperatures (≥ +2 °C) with 4,0 mm fin spacing;
- **CTE M6** for medium temperatures (≥ –15 °C) with 6,0 mm fin spacing, electric defrost version (ED) is recommended;
- **CTE L8** for low temperatures (≥ –35 °C) with 8,5 mm fin spacing, equipped with electric defrost (ED).

CTE

DRAFT

This range employs four types of standard fan motors:

- A) diameter 250 mm, shaded pole single-phase 230V/1/50-60 Hz with fibreglass charged polyamide fan guards.
- B) 315 mm diameter, external rotor single-phase 230V/1/50-60 Hz with built-in electric capacitor and epoxy coated steel fan guard.
- C) 350 mm diameter, external rotor single-phase 230V/1/50-60 Hz with built-in electric capacitor and epoxy coated steel fan guard.
- D) 500 mm diameter, external rotor three-phase 400V/3/50-60 Hz with epoxy coated steel fan guard.

The standard fan motors employed have the following features:

- IP 44 protection grade (IP 54 for Ø 500);
- class B insulation (F for Ø 350 - 500);
- inner thermal contact protection;
- operating temp. –35 °C ÷ +40 °C.

CTE Ø 250 / 315 mm - Model identification

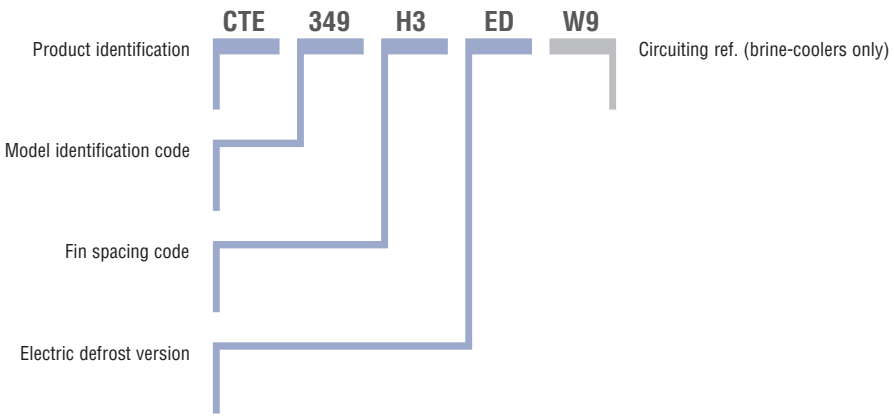

CTE

DRAFT

The versions with standard electric defrost (ED) are equipped with stainless steel heaters with vulcanised terminals preset for 400V/3/50-60Hz connection.

The electric parts and casework are connected to a ground terminal, the wiring of the motors** and heaters is carried out in separate IP 54 protection grade junction boxes.

On request the models can be equipped with non-standard coils, defrosting and fan motors (see table at page 154).

Select units with non published conditions with the **"Scelte"** selection program.

For special applications and further information consult our Technical Dept.

**For Ø 500 mm motor wiring is not provided

CTE Ø 350 / 500 mm - Model identification

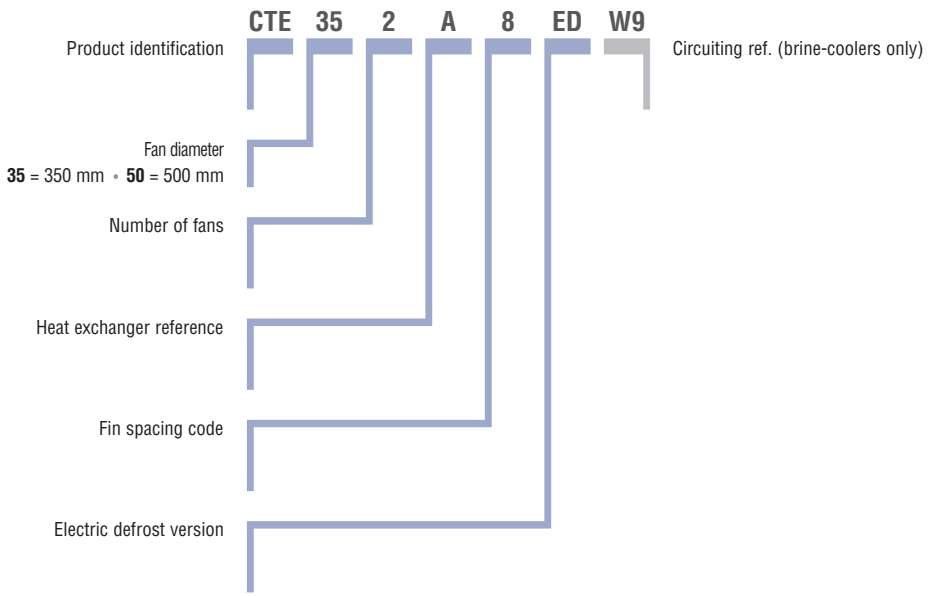

CTE Dimensional features

DRAFT

CTE Ø 250 mm

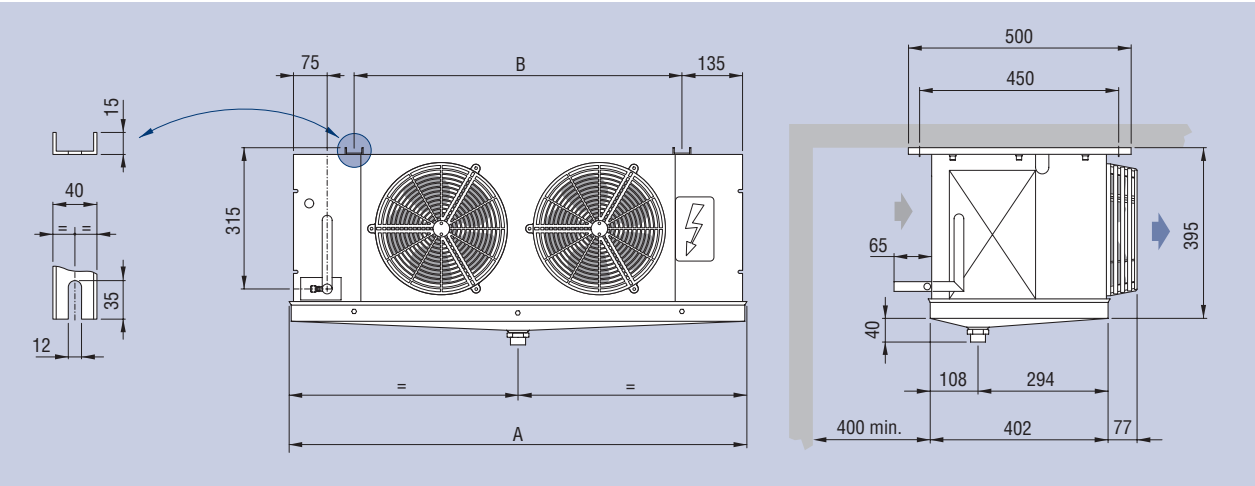

Model		CTE Ø 250	26H3	-	53H3	80H3	-
			-	38H3	75H3	113H3	150H3
			20M6	-	41M6	63M6	-
			-	29M6	58M6	86M6	115M6
			16L8ED	-	34L8ED	51L8ED	-
			-	23L8ED	45L8ED	68L8ED	90L8ED
Dimensions	mm	A	680	680	1030	1380	1730
		B	380	380	730	1080	1430

CTE Ø 315 mm

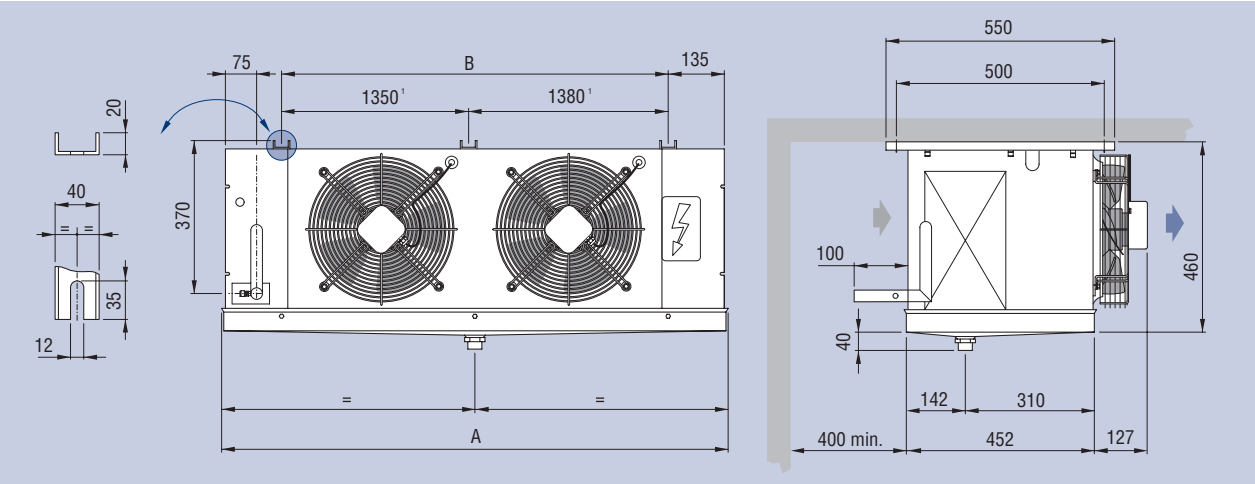

Model		CTE Ø 315	116H3	174H3	233H3	291H3	349H3
			96M6	145M6	194M6	243M6	291M6
			84L8ED	125L8ED	158L8ED	209L8ED	254L8ED
Dimensions	mm	A	1230	1680	2130	2580	3030
		B	930	1380	1830	2280	2730

1 Intermediate support bracket for 349H3, 291M6 and 254L8ED models only.

CTE Dimensional features

DRAFT

CTE Ø 350 mm

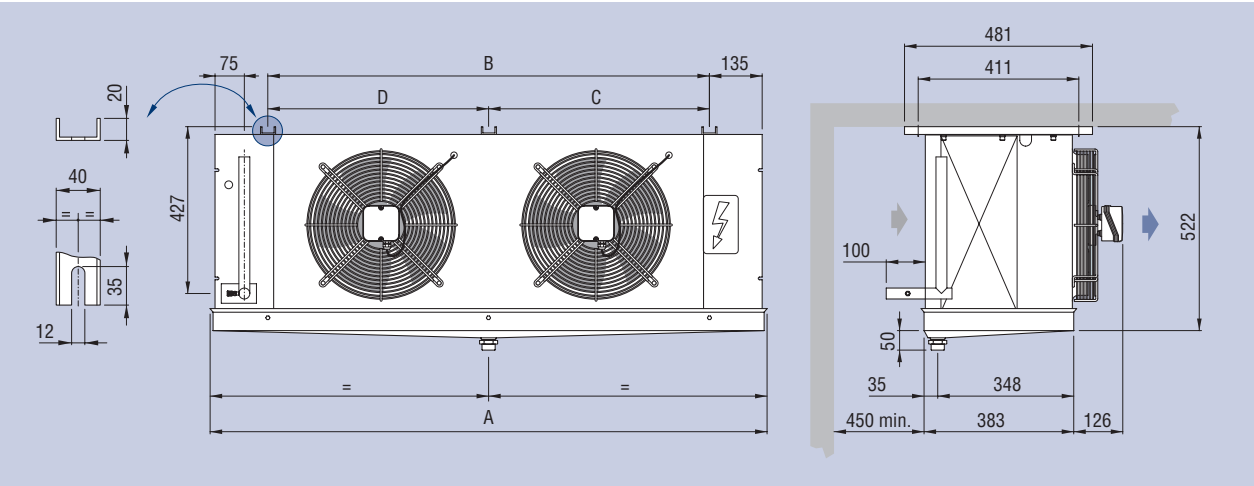

Model		CTE Ø 350	351E4 351E6 351E8 351A4 351A6 351A8	352E4 352E6 352E8 352A4 352A6 352A8	353E4 353E6 353E8 353A4 353A6 353A8	354E4 354E6 354E8 354A4 354A6 354A8	- - - 355A4 355A6 355A8
Dimensions	mm	A	875	1425	1975	2525	3075
		B	580	1130	1680	2230	2780
		C	-	-	-	1115	1665
		D	-	-	-	1115	1115

CTE Ø 500 mm

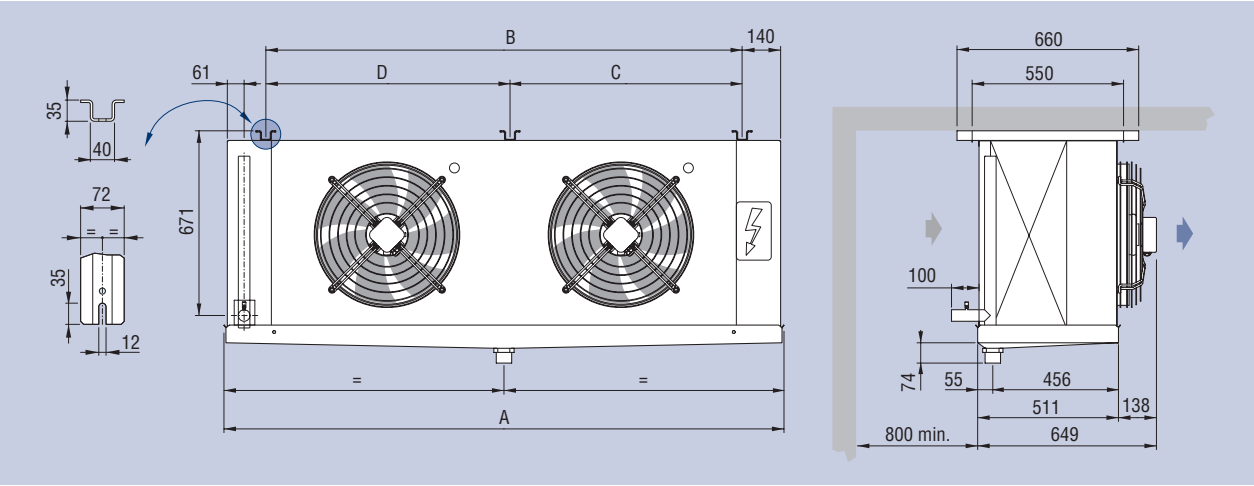

Model		CTE Ø 500	CTE501E4 CTE501A4 CTE501B4 CTE501E6 CTE501A6 CTE501B6 CTE501E8 CTE501A8 CTE501B8	CTE502E4 CTE502A4 CTE502B4 CTE502E6 CTE502A6 CTE502B6 CTE502E8 CTE502A8 CTE502B8	CTE503E4 CTE503A4 CTE503B4 CTE503E6 CTE503A6 CTE503B6 CTE503E8 CTE503A8 CTE503B8	- CTE504A4 CTE504B4 - CTE504A6 CTE504B6 - CTE504A8 CTE504B8
Dimensions	mm	A	1184	2034	2884	3734
		B	880	1730	2580	3430
		C	-	-	-	1700
		D	-	-	-	1730

CTE Technical features

DRAFT

Unit coolers

Model	CTE	26H3	38H3	53H3	75H3	80H3	113H3	150H3
Nom. capacity	kW	1,35	1,67	2,73	3,33	4,11	5	6,67
Capacity	kW	1,12	1,38	2,26	2,76	3,4	4,14	5,52
Air flow	m³/h	750	650	1500	1300	2250	1950	2600
Air throw	m	8	7	9	8	11	10	12
Fin spacing	mm	3,5	3,5	3,5	3,5	3,5	3,5	3,5
Internal surface	m²	0,7	1,1	1,4	2,1	2,1	3,2	4,2
External surface	m²	7,3	10,9	14,6	21,8	21,8	32,7	43,7
Coil connect.	In tube (mm)	12	12	12	12	12	12	12
	In connect. (SAE)	1/2	1/2	1/2	1/2	1/2	1/2	1/2
	Out tube (mm)	16	16	22	22	22	22	28
Net weight [1]	kg	15,8	17,9	25,1	27,9	35,4	40,3	45,2

Model	CTE	20M6	29M6	41M6	58M6	63M6	86M6	115M6 (Tested by TÜV NORD)
Nom. capacity	kW	1,20	1,51	2,40	3,02	3,60	4,52	6,01
Capacity	kW	0,99	1,25	1,99	2,5	2,98	3,74	4,98
Air flow	m³/h	820	750	1640	1500	2460	2250	3000
Air throw	m	8,5	7,5	10	9	12	11	13
Fin spacing	mm	6,0	6,0	6,0	6,0	6,0	6,0	6,0
Internal surface	m²	0,7	1,1	1,4	2,1	2,1	3,2	4,2
External surface	m²	4,4	6,7	8,9	13,3	13,3	20	26,6
Coil connect.	In tube (mm)	12	12	12	12	12	12	12
	In connect. (SAE)	1/2	1/2	1/2	1/2	1/2	1/2	1/2
	Out tube (mm)	16	16	22	22	22	22	28
Net weight	kg	15,3	17,4	24,6	27,4	34,9	39,8	44,7

Model	CTE	16L8	23L8	34L8	45L8	51L8 (Tested by TÜV NORD)	68L8	90L8
Nom. capacity	kW	1,05	1,27	2,1	2,54	3,15	3,8	5,07
Capacity	kW	0,87	1,05	1,74	2,1	2,61	3,15	4,2
Air flow	m³/h	870	780	1740	1560	2610	2340	3120
Air throw	m	9	8	11	10	13	12	14
Fin spacing	mm	8,5	8,5	8,5	8,5	8,5	8,5	8,5
Internal surface	m²	0,7	1,1	1,4	2,1	2,1	3,2	4,2
External surface	m²	3,3	4,9	6,5	9,8	9,8	14,7	19,6
Coil connect.	In tube (mm)	12	12	12	12	12	12	12
	In connect. (SAE)	1/2	1/2	1/2	1/2	1/2	1/2	1/2
	Out tube (mm)	16	16	22	22	22	22	28
Net weight	kg	14,8	16,4	23,6	26,4	33,4	37,8	42,7

Common data								
Fan motors	n° x Ø mm	1x250	1x250	2x250	2x250	3x250	3x250	4x250
Fan mot. absorp.	A	0,47	0,47	0,94	0,94	1,41	1,41	1,88
Nominal power	W	75	75	150	150	225	225	300
Circuit capacity	dm³	1,56	2,34	2,89	4,34	4,23	6,35	8,35
Electric defrost	W	750	750	1275	1275	1800	1800	2400
Pow. El. defrost	W	-	-	-	-	-	-	-
Water defrost	l/h	400	400	850	850	1200	1200	1700
Drain connect.	Ø (GAS)	1	1	1	1	1	1	1
	WD vers. Ø (GAS)	1 1/4	1 1/4	1 1/4	1 1/4	1 1/4	1 1/4	1 1/4
Defrost connect.	Ø (GAS)	3/4	3/4	3/4	3/4	3/4	3/4	3/4

1 The weight refers to models with ED electric defrost.

X Use thermostatic valve with external pressure equalizer.

- For brine coolers capacities please use "**Scelte**" selection software.

DRAFT

Tested by TÜV NORD

116H3	174H3	233H3	291H3	349H3	351E4	351A4	352E4	352A4	353E4	353A4	354E4	354A4	355A4
5,88	8,81	11,8	14,7	17,6	4,2	5,1	8,6	10,3	12,9	15,5	17,4	20,7	25,83
4,87	7,3	9,74	12,2	14,6	3,51	4,21	7,11	8,52	10,71	12,81	14,39	17,11	21,39
2740	4110	5480	6850	8220	2320	2090	4630	4170	6950	6260	9270	8340	10430
14	16	18	20	22	14	13	16	15	18	17	20	19	21
3,5	3,5	3,5	3,5	3,5	4,0	4,0	4,0	4,0	4,0	4,0	4,0	4,0	4,0
3,1	4,6	6,1	7,6	9,2	1,84	2,77	3,69	5,53	5,53	8,3	7,36	11,05	13,81
31,6	47,4	63,1	78,9	94,7	15,3	22,9	30,5	45,8	45,8	68,7	61,1	91,6	114,5
12	12	16	16	22	12	12	12	16	16	22	22	22	22
1/2	1/2	5/8	5/8	-	1/2	1/2	1/2	5/8	5/8	-	-	-	-
28	28	28	35	35	22	22	28	28	28	35	35	42	42
41,8	57,7	72,4	89,5	99,9	29	32	50	57	67	78	84	100	133

96M6	145M6	194M6	243M6	291M6	351E6	351A6	352E6	352A6	353E6	353A6	354E6	354A6	355A6
5,33	7,99	10,6	13,3	16	3,7	4,7	7,5	9,5	11,3	14,3	15,1	19	23,8
4,41	6,62	8,81	11	13,2	3,08	3,9	6,23	7,85	9,38	11,87	12,49	15,75	19,69
3130	4700	6260	7830	9400	2510	2320	5020	4630	7530	6950	10040	9270	11590
15	17	19	21	23	15	14	17	16	19	18	21	20	22
6,0	6,0	6,0	6,0	6,0	6,0	6,0	6,0	6,0	6,0	6,0	6,0	6,0	6,0
3,1	4,6	6,1	7,6	9,2	1,84	2,77	3,69	5,53	5,53	8,3	7,36	11,05	13,81
19,3	28,9	38,5	48,2	57,8	10,5	15,8	21,1	31,6	31,6	47,4	42,1	63,2	79
12	12	16	16	22	12	12	12	16	16	22	22	22	22
1/2	1/2	5/8	5/8	-	1/2	1/2	1/2	5/8	5/8	-	-	-	-
28	28	28	35	35	22	22	28	28	28	35	35	42	42
41,3	57,2	71,4	88,5	98,9	28	31	49	56	66	76	83	98	130

Tested by TÜV NORD — Tested by TÜV SUED

84L8	125L8	158L8	209L8	254L8	351E8	351A8	352E8	352A8	353E8	353A8	354E8	354A8	355A8
4,73	7,08	9,04	11,8	14,2	3,2	4,2	6,4	8,4	9,7	12,6	13,2	16,9	21,1
3,92	5,86	7,49	9,76	11,8	2,64	3,45	5,31	6,96	8	10,47	11	13,97	17,46
3270	4900	6530	8180	9810	2620	2470	5250	4940	7870	7410	10500	9880	12350
16	18	20	22	24	16	15	18	17	20	19	22	21	23
8,5	8,5	8,5	8,5	8,5	8,5	8,5	8,5	8,5	8,5	8,5	8,5	8,5	8,5
3,1	4,6	6,1	7,6	9,2	1,84	2,77	3,69	5,53	5,53	8,3	7,36	11,05	13,81
14,2	21,3	28,4	35,5	42,6	7,75	11,6	15,5	23,3	23,3	34,9	31	46,5	58,1
12	12	16	16	22	12	12	16	16	22	22	22	22	28
1/2	1/2	5/8	5/8	-	1/2	1/2	5/8	5/8	-	-	-	-	-
28	28	28	35	35	22	28	28	28	35	35	42	42	42
39,3	54,2	67,4	83,5	92,9	27	30	48	55	65	74	82	96	128

2x315	3x315	4x315	5x315	6x315	1x350	1x350	2x350	2x350	3x350	3x350	4x350	4x350	5x350
0,84	1,26	1,68	2,1	2,52	0,96	0,96	1,92	1,92	2,88	2,88	3,84	3,84	4,8
190	285	380	475	570	185	185	370	370	555	555	740	740	925
6,17	8,06	11,08	13,21	17,76	3,3	5,2	6,6	9,9	9,8	14,7	12,9	19,4	24,3
2700	3990	5250	6060	7200	1750	2250	3150	4050	4900	6300	6300	8100	9900
-	-	-	-	-	2000	2750	3600	4950	5600	7700	7200	9900	12100
1400	1800	2500	3200	3800	-	-	-	-	-	-	-	-	-
1	1	1	1	1	1	1	1	1	1	1	1	1	1
1 1/4	1 1/4	1 1/4	1 1/4	1 1/4	-	-	-	-	-	-	-	-	-
3/4	3/4	3/4	3/4	3/4	3/4	3/4	3/4	3/4	3/4	3/4	3/4	3/4	3/4

Tested models:
CTE 116H3
CTE115M6
CTE51L8
CTE158L8

CTE Technical features

DRAFT

Unit coolers

Model	CTE	501E4	501A4	501B4
Nom. capacity	kW	10,7	13,5	15,3
Capacity	kW	8,8	11,2	12,7
Air flow	m³/h	7360	6820	6410
Air throw	m	27	26	25
Fin spacing	mm	4	4	4
Internal surface	m²	4,3	6,4	8,6
External surface	m²	35	53	71
Coil connect.	In tube (mm)	16	16	22
	In connect. (SAE)	-	-	-
	Out tube (mm)	28	28	35
Net weight [1]	kg	-	-	-

Model	CTE	501E6	501A6	501B6
Nom. capacity	kW	9,4	12,4	13,9
Capacity	kW	7,8	10,3	11,5
Air flow	m³/h	7700	7360	6950
Air throw	m	28	27	26
Fin spacing	mm	6	6	6
Internal surface	m²	4,3	6,4	8,6
External surface	m²	24	37	49
Coil connect.	In tube (mm)	16	16	22
	In connect. (SAE)	-	-	-
	Out tube (mm)	28	28	35
Net weight [1]	kg	-	-	-

Model	CTE	501E8	501A8	501B8
Nom. capacity	kW	8,2	10,7	13,2
Capacity	kW	6,8	8,8	10,9
Air flow	m³/h	7900	7630	7290
Air throw	m	29	28	27
Fin spacing	mm	8,5	8,5	8,5
Internal surface	m²	4,3	6,4	8,6
External surface	m²	18	27	36
Coil connect.	In tube (mm)	16	22	22
	In connect. (SAE)	-	-	-
	Out tube (mm)	35	35	35
Net weight [1]	kg	-	-	-

Common data				
Fan motors	n° x Ø mm	1x500	1x500	1x500
Fan mot. absorp.	A	1,8	1,8	1,8
Nominal power	W	860	860	860
Circuit capacity	dm³	7,8	11,7	15,6
Electric defrost	W	5040	5040	5040
Drain connect.	Ø (GAS)	1”	1”	1”

1 The weight refers to models with ED electric defrost.

X Use thermostatic valve with external pressure equalizer.

- For brine coolers capacities please use “**Scelte**” selection software.

DRAFT

502E4	502A4	502B4	503E4	503A4	503B4	504A4	504B4
22,5	26,7	29,8	32,7	41,3	46,7	49,5	57,0
18,6	22,1	24,7	27,1	34,2	38,7	41,0	47,2
14730	13640	12830	22090	20470	19250	27290	25670
29	28	27	29	28	27	29	28
4	4	4	4	4	4	4	4
8,6	12,8	17,1	12,8	19,3	25,6	25,6	34,2
71	106	142	106	159	212	212	283
22	22	22	22	28	28	28	28
-	-	-	-	-	-	-	-
35	35	42	42	42	54	54	54
-	-	-	-	-	-	-	-

502E6	502A6	502B6	503E6	503A6	503B6	504A6	504B6
18,1	24,5	28,1	28,6	37,7	43,8	46,2	54,3
15,0	20,3	23,3	23,7	31,2	36,2	38,3	45,0
15400	14730	13910	23110	22090	20870	29460	27830
30	29	28	30	29	28	30	29
6	6	6	6	6	6	6	6
8,6	12,8	17,1	12,8	19,3	25,6	25,6	34,2
49	73	98	73	110	146	146	195
22	22	22	22	28	28	28	28
-	-	-	-	-	-	-	-
35	35	42	42	42	54	54	54
-	-	-	-	-	-	-	-

502E8	502A8	502B8	503E8	503A8	503B8	504A8	504B8
16,7	21,1	26,8	24,6	31,7	39,8	42,8	53,7
13,8	17,4	22,2	20,4	26,2	33,0	35,5	44,5
15810	15270	14730	23720	22910	22090	30540	29460
31	30	29	31	30	29	31	30
8,5	8,5	8,5	8,5	8,5	8,5	8,5	8,5
8,6	12,8	17,1	12,8	19,3	25,6	25,6	34,2
36	54	72	54	81	108	108	144
22	28	28	28	28	28	35	35
-	-	-	-	-	-	-	-
35	42	42	42	42	54	54	54
-	-	-	-	-	-	-	-

2x500	2x500	2x500	3x500	3x500	3x500	4x500	4x500
3,6	3,6	3,6	5,4	5,4	5,4	7,2	7,2
1720	1720	1720	2580	2580	2580	3440	3440
15,1	22,6	30,2	22,4	33,6	44,8	44,6	59,4
10200	10200	10200	15000	15000	15000	19800	19800
2”	2”	2”	2”	2”	2”	2”	2”

CTE

DRAFT

Options and special versions

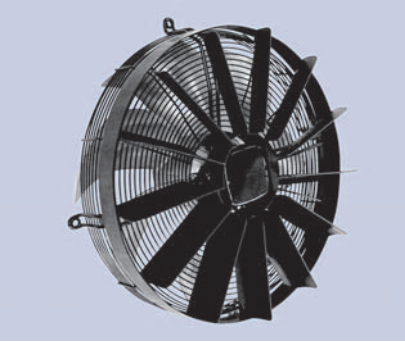

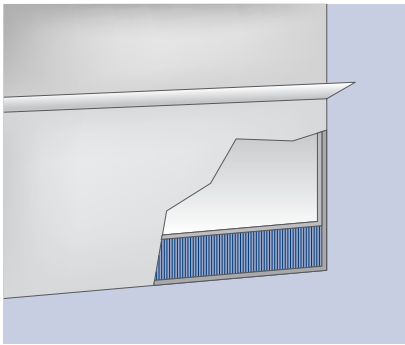

- Streamers
- Special feed fan motors 60Hz
- Drain pan with insulation

For more informations see table pag 154

Head Office:
33050 Pocenia (Udine) Italy - Via Giulio Locatelli, 22
telephone +39 0432.772.001 - telefax +39 0432.779.594
e-mail: infoeco@luvata.com

www.ecogroup.com

About Luvata

Luvata is the leading international metals supplier of solutions, services, components and materials for manufacturing and construction. Luvata's solutions are used in industries such as power generation, architecture, automotive, transport, medicine, air-conditioning, industrial refrigeration, consumer products and construction. The company's continued success is attributed to its longevity, technological excellence and strategy of building partnerships beyond metals

www.luvata.com